The Master Board is the central controller of the BMS. It will be responsible for pack-level decision making including fault detection, battery pack isolation, SOC/SOH estimation, and external communication to the Slave board and to the BMS viewer. It consists of STM32F44 MCU to perform all the above functions and to run the cell balancing algorithm. It also houses the INA240 for amplification of shunt voltage for more accurate current reading and consequentially more accurate SOC estimation.

For the slave board subsystem design, some of the important design decisions I made were as follows:

SOC Calculation and Redesign after Design Review Feedback

To monitor current and calculate SOC of the pack, initially we chose to use the OCV lookup method. However, after the feedback from design review we realised it would be more accurate and better for the purpose of real life relevance of the project if we estimated the SOC using a shunt resistor instead of OCV lookup method. This required a significant redesign of the master board because the OCV lookup method did not require any additional hardware but the shunt resistor method for current sensing required a low-drift voltage amplifier.

Initially, I chose the AMC1301 as the low-drift voltage amplifier, as that would also provide galvanic isolation along voltage amplification. This was based on the assumption that for a 12S1P 60V pack, the design would require galvanic isolation and separation of measurement domain from the control domain.

However, once we reduced the scope of the project from 6S to 12S, I replaced it with a direct high-side current sense amplifier as galvanic isolation was no longer needed for voltages below 50V. The high-side current sense amplifier we chose was the INA240 with a 100V/V gain. The circuit is shown below:

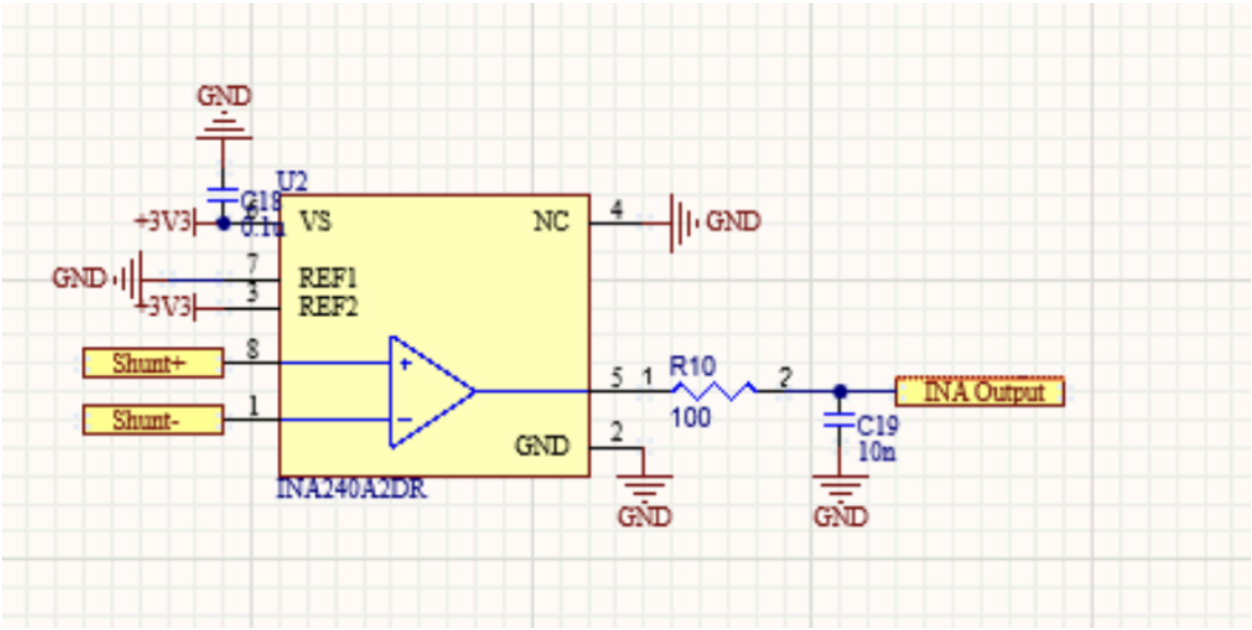

Image 1: Current Sensing Circuit

We chose a $1m\Omega$ shunt resistor with a 100V/V gain on the amplifier. Our design is specified for a 5A minimum current and 30A maximum current. This means that using Ohm's law:

$$Max\ Shunt\ Voltage\ = I\ *\ R\ =\ 0.001\Omega\ *\ 30A\ =\ 5mV$$

$$Min\ Shunt\ Voltage\ =\ 0.001\Omega\ *\ 5A\ =\ 30mV$$

After the amplification, the ADC configured pin on the STM MCU would read:

$$Max\ ADC\ Input\ Voltage\ =\ G\ *\ Shunt\ Voltage\ =\ 5mV\ *\ 100\ =\ 0.5V$$

$$Min\ ADC\ Input\ Voltage\ =\ 30mV\ *\ 100\ =\ 3V$$

As the STM32 ADC range is 0V to 3.3V, the design is able to utilize most of the range without any saturation leading to higher resolution.

Furthermore this design is able to resolve approximately 8mA as derived from the following equations:

$$ADC\ LSB\ = 3.3\ /\ 4096\ =\ 0.8\ mV$$

$$ADC\ LSB\ in\ reference\ to\ V_shunt\ =\ 0.8\ mV/100\ =\ 8\ uV$$

Therefore,

$$Equivalent\ Current\ Resolution\ = 8\ uV\ /\ 1\ m\Omega\ =\ 8\ mA$$

A resolution of 8mA is a high-resolution current measurement and suitable for accurate SOC estimation using coulomb counting for the design specification.

Power Tree

The master board takes in pack voltage (18V to 25.2V) as input and using a buck, first steps it down to 12V. The 12V, then further is regulated, to 5V and 3.3V via linear regulators. The 5V and 3.3V rails are used to power all components on the master board including the MCU. The Power tree schematic is shown in the image below:

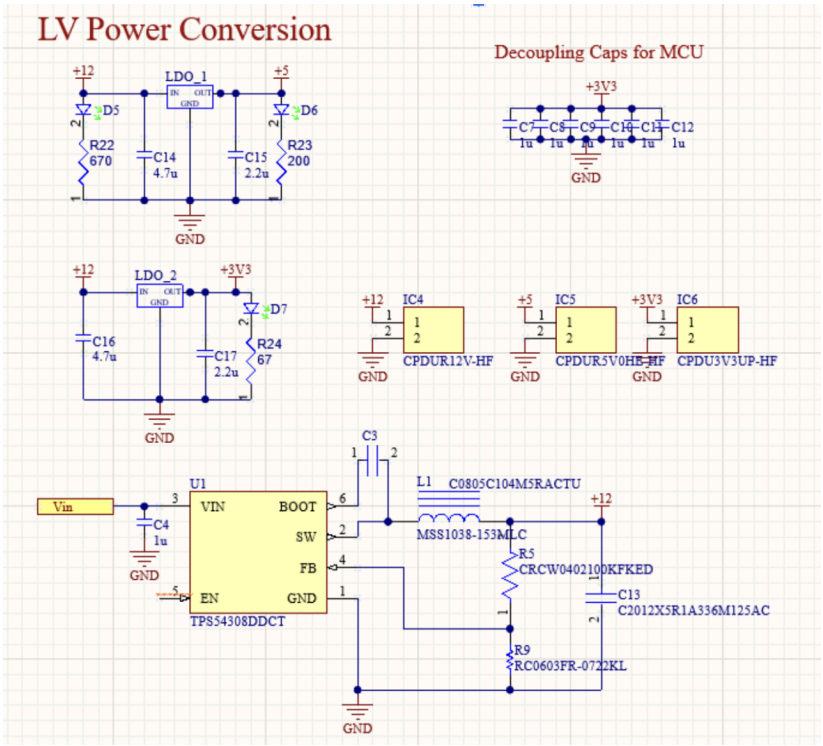

Image 2: Main Board Power Tree

The TPS54308 buck converter was selected as it is a buck converter with synchronous rectification and is able to accept a variable input voltage from 4 to 36 volts and convert it to 12V. It also required a relatively low-valued and small sized inductor which helped us to reduce the size of the board and BOM cost. Furthermore, linear regulators were not used to step down pack voltage to 3.3V and 5V as linear regulators dissipate the difference in voltage as heat. This would lead to huge inefficiencies and significant heat generation.

Linear Regulators, instead, were used to step down the voltage from 12V to 3.3V and 5V. The SPX1117 LDO regulator in this design is a 800 mA class low dropout voltage regulator family. It is employed in applications where low noise voltage rails are required after the buck pre-regulator and when there is a need for compactness, cost effectiveness, and moderate current drive capacity. It provides low noise voltage rails and high ripple rejection, which is required in analogue and digital measurement applications, as in this case on the master board. For both 5V and 3.3V voltage rails, several 1uF capacitors along with TVS diodes were also used as bypass and decoupling capacitors.

Layout Implications

Current sense accuracy is highly dependent on the PCB routing from the shunt resistor to amplifier inputs. This is explicitly recommended by TI, along with a recommendation for a Kelvin connection to the shunt resistor in the INA240 datasheet.

So, in the design, I treated shunt/amplifier placement and routing as an 'analog design' problem, rather than a generic routing problem, due to SOC estimation error integrating over time. This involved reinforcing shunt-layout rules like short sense traces, Kelvin pickup, symmetry, and proximity.